REV.	DATE	DESCRIPTION	SIGNATURE
1	XX	XX	XX

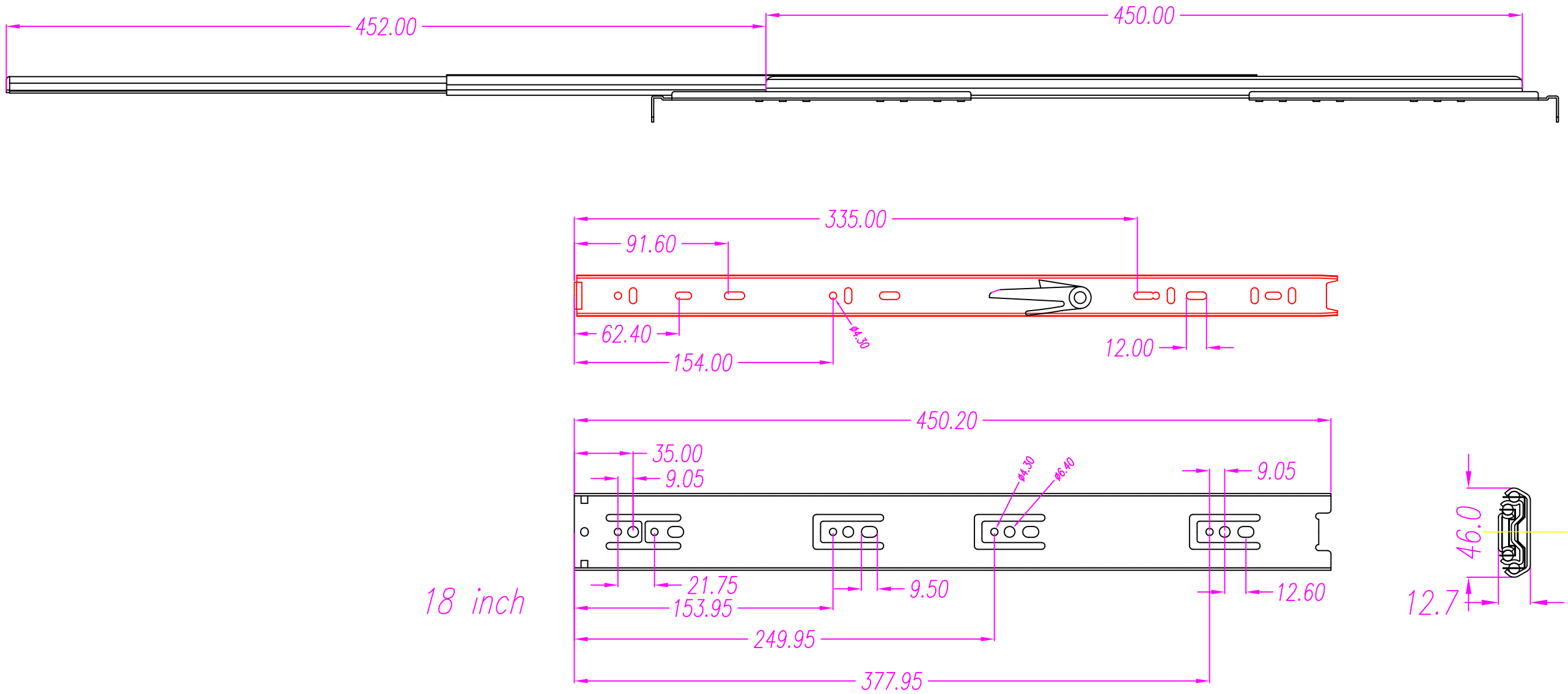

18 inch

This drawing contains proprietary information of Wintech Conmputer Co. Ltd. Any duplication or use of this drawing , in whole or in part , without a written consent from Wintech Computer Co. Ltd. is strictly prohibited.

ADEK ENG DEPT

PROJ

SCALE 1 : 1
DO NOT SCALE DWG

TOLERANCES UNLESS
DECIMAL X.XX ±0.12
DECIMAL X.X ±0.25
DECIMAL X ±0.50
ANGULAR ±1°

TITLE SR-18

DGN

DRW Alex 2018.11.12

FILE NO

MATERIAL

REV. 1.0

UNIT mm

JB-04-01